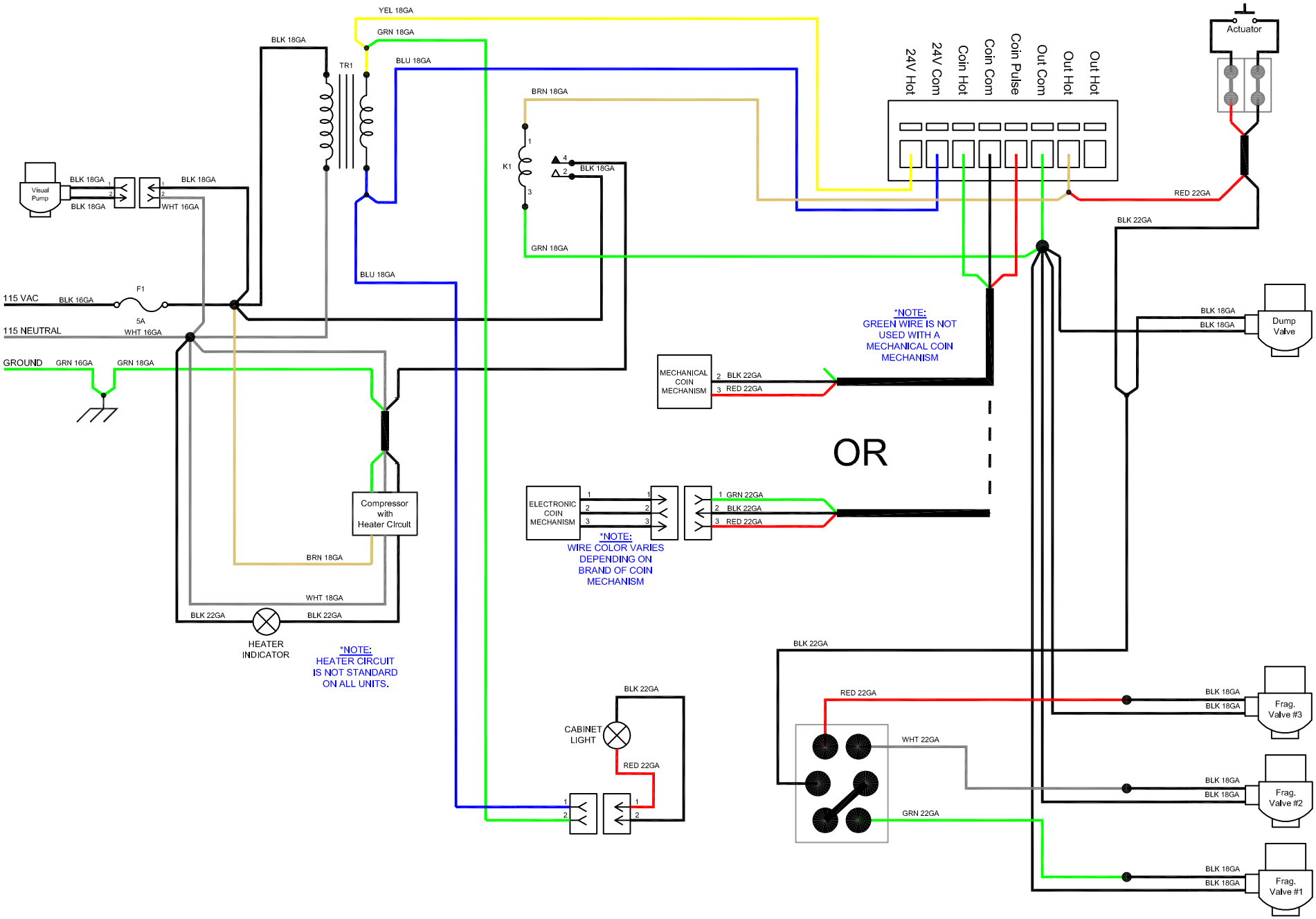

FRAGRA*MATICS MFG. CO., INC.		
TITLE: Wiring Diagram Using Fragra*Matics 24V Timer		
JLW	EVD-3 with Pushbutton	REV NEW
DATE: 10/18/2006	SHEET: 1 of 1	